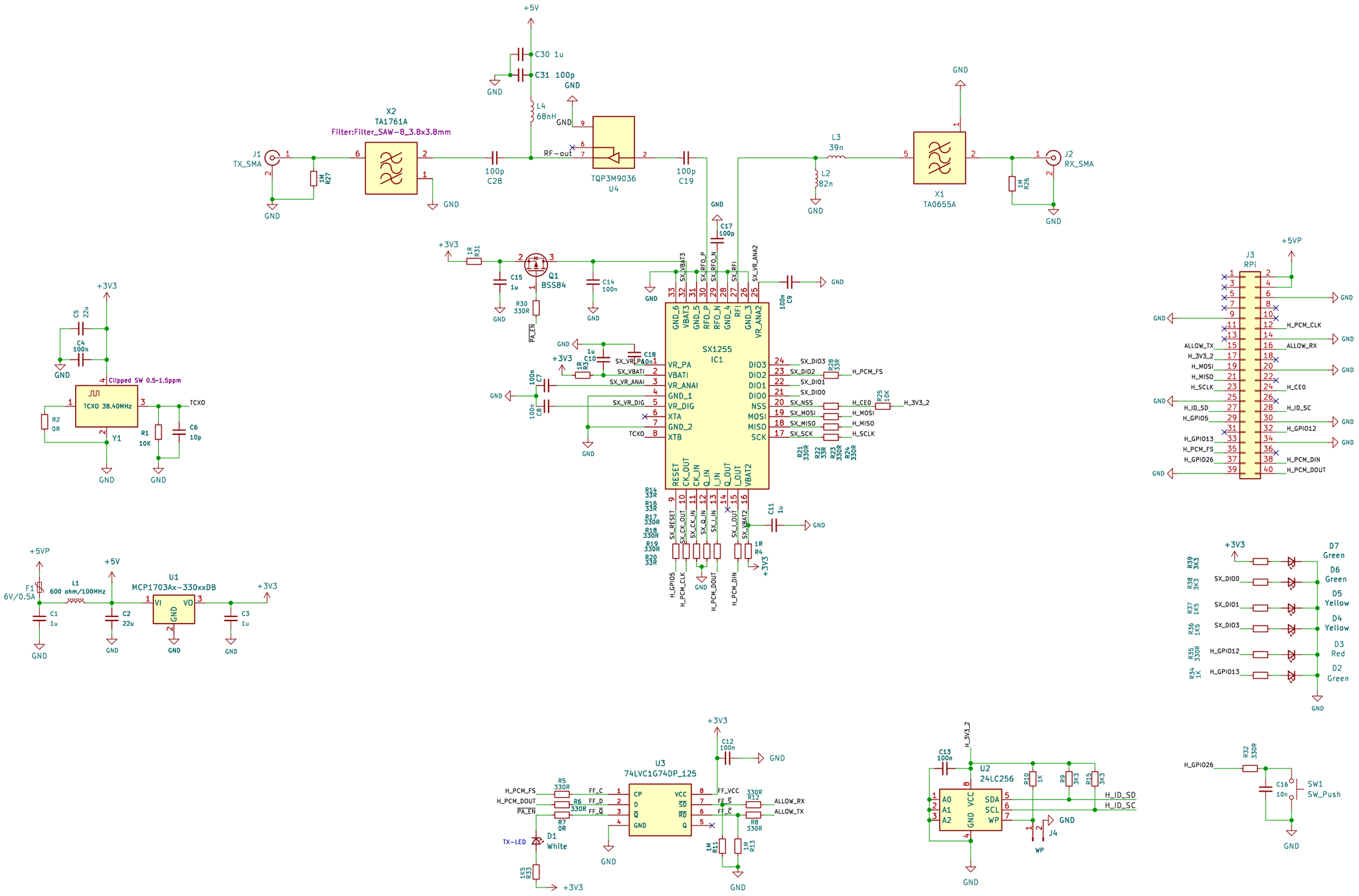

Modified SXceiver

Z32IT

Sheet: /

File: SX1255-SXCEIVER-HAT with BPF.kicad_sch

Title: SX1255 RPi 4-5 HAT with BPF

Size: A3	Date: 2026-03-02	**Rev: V1.4**
KiCad E.D.A. 9.0.7		Id: 1/1